# EXN02-High Feed Milling Cutter

## ZANHO Cutting Tools




## Feature

EXN02 LNMU02 series high feed end mills are designed for CNC milling applications with double-sided 4-edge inserts. The series includes multiple tool diameters, overall lengths, connection sizes

and working dimensions for different machining setups. The specification image shows a 17° cutting angle and replaceable LNMU02 series inserts. Please confirm the complete insert designation and selected tool dimensions before ordering.

# Descriptions

## EXN02 LNMU02 High Feed End Mills

Double-sided 4-edge insert system for CNC high feed milling

### Product Overview

EXN02 LNMU02 series high feed end mills are designed for CNC milling applications using replaceable LNMU02 series inserts. The modular cutting end and cylindrical shank structure support model selection according to tool diameter, overall length, working length and connection size.

The supplied specification image shows multiple models with different DCX, DC, DCONMS, OAL, LH and LS dimensions. The listed models use a 17° cutting angle as shown in the table.

### Main Features

**High Feed Milling Design:**
Designed for high feed milling applications with a replaceable insert cutting system.

**Double-Sided 4-Edge Insert System:**
The product image identifies the tool as a 4-edge double-sided insert system for LNMU02 series inserts.

**Multiple Tool Dimensions:**
Models are listed with different cutting diameters, shank diameters, overall lengths, working lengths and front-end dimensions.

**17° Cutting Angle:**
The KAPR column in the supplied image shows 17° for the listed models.

**Model-Based Selection:**

Select the appropriate model according to the required DCX, DC, DCONMS, OAL, LH, LS and insert compatibility.

## Technical Specifications

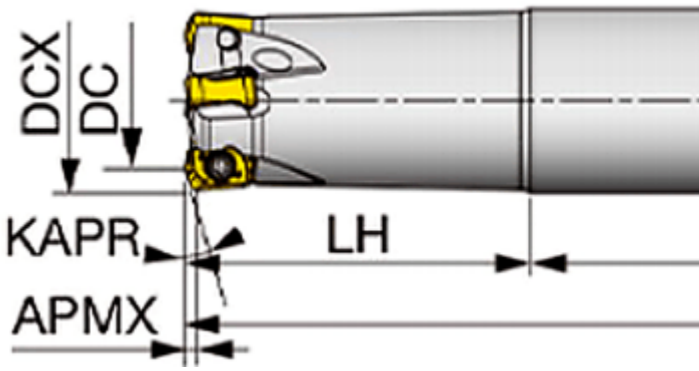


| Designation | CICT | APMX (mm) | DCX (mm) | DC (mm) |
|---|---|---|---|---|
| EXN02R08M10.0-100-01 | 1 | 0.5 | 8 | 3.61 |
| EXN02R09M10.0-100-01 | 1 | 0.5 | 9 | 4.74 |
| EXN02R010M10.0-100-02 | 2 | 0.5 | 10 | 5.85 |
| EXN02R011M10.0-100-02 | 2 | 0.5 | 11 | 6.76 |
| EXN02R012M12.0-80-03 | 3 | 0.5 | 12 | 7.68 |
| EXN02R012M12.0-120-03 | 3 | 0.5 | 12 | 7.68 |
| EXN02R013M12.0-80-03 | 3 | 0.5 | 13 | 8.68 |
| EXN02R013M12.0-120-03 | 3 | 0.5 | 13 | 8.68 |
| EXN02R014M14.0-120-03 | 3 | 0.5 | 14 | 9.51 |
| EXN02R014M14.0-150-03 | 3 | 0.5 | 14 | 9.51 |

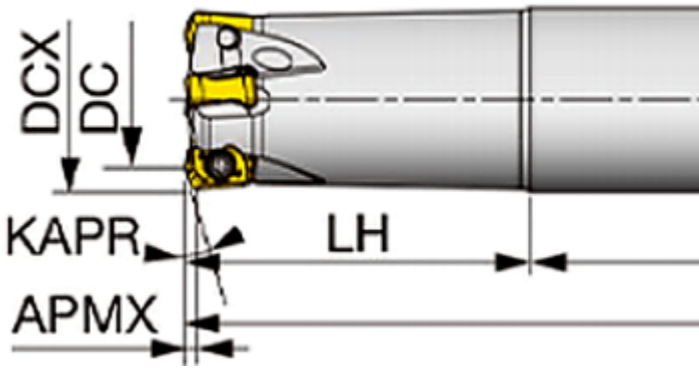


| Designation | CICT | APMX (mm) | DCX (mm) | DC (mm) |
|---|---|---|---|---|
| EXN02R015M14.0-120-03 | 3 | 0.5 | 15 | 10.43 |
| EXN02R015M14.0-160-03 | 3 | 0.5 | 15 | 10.43 |
| EXN02R016M16.0-120-04 | 4 | 0.5 | 16 | 11.35 |
| EXN02R016M16.0-160-04 | 4 | 0.5 | 16 | 11.35 |
| EXN02R017M16.0-120-04 | 4 | 0.5 | 17 | 12.27 |
| EXN02R017M16.0-160-04 | 4 | 0.5 | 17 | 12.27 |

### Model Selection

Please select the model according to the required tool diameter, shank diameter, overall length, working length, front-end dimensions and compatible LNMU02 insert specification.

### EXN02 LNMU02 High Feed End Mill Series

Contact us to confirm model selection, insert compatibility and technical details for your CNC milling application.